ISSN 2395-1621

The Adaptive Control on Ground Clearance of Vehicle with Variable Speed

#1Smayantak Hokale, #2Prof. V. R. Patil

1smayantak@gmail.com
2ptilvijayr@yahoo.com

ME Automotive Engineering, AISSMS College of Engineering, Savitribai Phule Pune University

ABSTRACT

Handling of vehicle is depends on number of parameter. Centre of gravity of that vehicle is one of them. For sport car it always keeps it low but for the passenger car it compromises with its ground clearance. To provide the appropriate ground clearance is need of designer to reduce the destructive damage of bottom component of vehicle. CG is important parameter to vehicle for handling and dynamic stability at high speed. In advanced vehicle there are active and semi-active suspensions to give stability to the vehicle. Here, this paper introducing various techniques used to provide ability to the vehicle for more stability and road holding capacity. On the same platform what will the effect of replacing passive suspension with adjustable damper. The review shown that, there are multiple parameters changed with replacing passive suspension which give penalty in complexity, reliability, cost and weight. So there is need of developing a system which is intermediate in passive and active suspension. This can be done by varying the ride height by providing actuator to the suspension system.

Keywords— Active suspension, Centre of gravity, Controlling strategies, Ground clearance, Handling of vehicle, MSC ADAMS, Passive suspension, Road holding, Semi-active suspension.

ARTICLE INFO

Article History

Received :18th November 2015

Received in revised form :

19th November 2015

Accepted : 21st November , 2015

Published online :

22nd November 2015

I. INTRODUCTION

Road conditions are not similar at all place, it changes with application, environment and climate. In city at different sectors like school-hospital there are speed breakers of different dimensions. At certain condition road goes straight without any pits else we found irregularity. Most of the people buy only one 4 wheeler which they use that at all this condition. Hence it's necessary to give some standard ground clearance to the vehicle. But still there are some restrictions to drive the car on highway and in city.

It is not possible for the vehicle to run at high speed on its standard ground clearance provided considering the city obstacles. To provide the ability to the vehicle to give the good performance at high speed and low speed it is necessary to build one system which can vary the ground clearance. This can achieve by changing the suspension height with respect to speed of the vehicle.

Suspension systems plays vital role while designing the car for good stability and road holding ability [1]. It is very difficult to achieve this ability at all road condition with passive suspension system [2]. This problem can solve by active suspension system but this is not widely used because it required more external energy and additional controlling system which affected on cost of the vehicle [3]. With a view to reducing complexity and cost while improving ride, handling and performance the semi active suspension system is used.

In this paper various parameters are discussed which are related to the ground clearance and suspension system and its control. This gives the idea about the vehicle characteristics like ride control, height control, roll control, road holding etc. and its effect on car performance.

II. LITERATURE REVIEW

Hrishikesh V Deo & Nam P Suh[4] introduced that how the comfort and handling are interrelated with CG of the vehicle. They designed the suspension system which varies its height and stiffness according to speed. The researchers used short long arm suspension system which is widely used in front wheel suspension. To controlling the height and stiffness can be achieved by making the lower spring pivot movable along the lower control arm. For moving the pivoted point and achieve desired position electric motor is used to actuate the actuator. But there are some limitation comes across, that is about less quick response. In this paper they also described about active and semi-active suspensions limitations and how it can be overcome with adaptive control with variable height.

P.E. Uys *, P.S. Els, M. Thoresson[5] presented the suspension settings for optimal ride comfort of off-road vehicles travelling on roads with different roughness and speeds. In this they vary the suspension settings for different roads roughness and vehicle speeds and results achieved for comfort level. Simulation is performed on a Land Rover Defender 110 model in MSC.ADAMS software for speeds ranging from 10 to 50 km/hr. Tests were performed on 100m Belgian paving and also ISO 2631-1, BS 6841 and VDI 2057 at different speeds. Correlation between measured and simulated results is very good, especially with respect to vertical acceleration.

There are number of applications related to ground clearance and their consideration is designer need. To give the information about vital role of ground clearance Debojyoti Mitra[6] presented design optimization of ground clearance of domestic cars. Stability and performance is also parameter of ground clearance. If we allow the vehicle for the low ground clearance then it helps to give less drag force simultaneously it consumes less fuel resulting less pollution. The experiment is carried out in wind tunnel with the help of notch back car model. The result shows that the positive lift force reduces with increasing height of ground clearance. Hence the optimized value of h/b ratio has to be taken in to consideration of clearance design. With the help of spoiler the lift force problem can be solve.

The active suspension system is very essential for handling and giving comfort. These days this system is used in different type of vehicles like hybrid vehicles. Morteza and Mahdi[7] presented active suspension system in parallel hybrid electric vehicles. In this they compare the conventional and hybrid vehicle with active suspension. For conventional the power is taken from the IC engine hence gives little lag in actuation while in hybrid electric vehicle it is direct, resulting less fuel consumption and less emission.

Guangqiang Wu, Guodong Fan, and Jianbo Guo[8] presented ride comfort evaluation for road vehicle based on rigid-flexible coupling multibody dynamics. Spectrum of vibrations occurs in the vehicle due to various speeds. There are different road profiles and roughness therefore occupants are subjected to accelerations in different directions, which caused discomfort. With the help of ADAMS-CAR they built rigid and rigid flexible coupling multi-body vehicle models. As speed increases the relative difference goes increases, at 80 km/hr it becomes 8%. It is better to build the variable suspension with rigid flexible coupling.

Mohammad, Mahir and Iyad[9] gives new control strategy for active suspension using modified fuzzy and PID controllers. In this they proposed controlled strategy to control the suspension system by means of electro-hydraulic actuator. The passive suspension is replaced by low frequency active suspension. The quarter car model tested under rolling effect, cornering and pitching effect at different speeds and road profiles. The reduction in body acceleration by 60% gives better road holding and car stability. There are two types of active suspensions which are commonly recognized that are low bandwidth and high bandwidth. Non-linear controllers are more capable to handle high bandwidth active suspension because they show good capability at worst road condition. Researchers gives the linear controller over active suspension of low bandwidth new PID with fuzzy switch which improve the performance of suspension.

The design of suspension is concern with three main parameter; car body acceleration for ride comfort, the tire deflection for road holding and the suspension travel. The ideal suspension system would minimize these three quantities for any road and operating condition, which is not achievable for suspension having constant spring stiffness and damping. This can be achieved by active suspension system. But this needed high external energy. Hence it is not widely used. The alternative solution is to use of semi-active suspension. It reduces car body resonance without compromising road holding. But this solution gives disturbance like jerk, rattling noise etc. Hence C. Collette, A. Preumont[10] presented paper on energy transfer in semi-active suspension that the energy transfer phenomenon may be bearable up to certain extent by filtering the control signal or providing suitable mounting.

III. VARIABLE GROUND CLEARANCE

There are two techniques to vary the ground clearance that are open loop and closed loop system. In closed loop system there are two type active suspension and semi-active suspension system.

A. Active suspension system:

In active suspension actuator are located parallel to the spring and shock absorbers as shown in figure 1. To apply the proper control over the suspension data is taken from body and wheel motion [1] by means of sensors. The external supply is needed to actuate the actuator hence there are various techniques developed by the researchers such as sky-hook damping model, PI and PD fuzzy controllers, the optimum parameters of fuzzy controller by genetic algorithm [11]. Generally speaking a high- quality active suspension system can separate the vehicle chassis from the vibration arising from road surface.

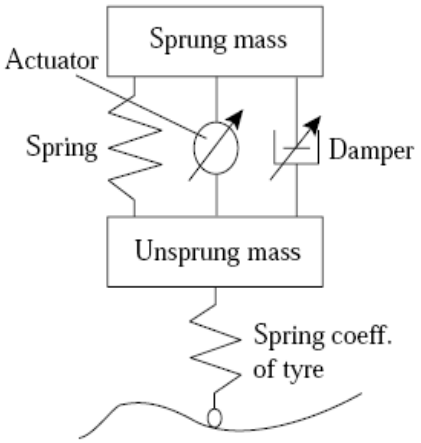

Fig.1. Active suspension [11]

It further ensures the contact between the wheels and road surface for better ride comfort and safety. The active suspension classified in two modes i.e. low bandwidth (1-3 Hz) and high bandwidth (10-15 Hz) [12].

B. Semi-active suspension system

In semi-active suspension actuator are located parallel to the spring and shock absorbers as shown in figure 2. There are several categories of semi-active suspension system

1) Slow-active- Suspension damping or spring rate can be switched between several levels of response to change in driving condition. This system is capable to control the pitch, bounce and roll motion of the vehicle.

2) Low bandwidth- responds the low frequency sprung mass motion.

3) High bandwidth- responds both low as well as high frequencies [b.1].

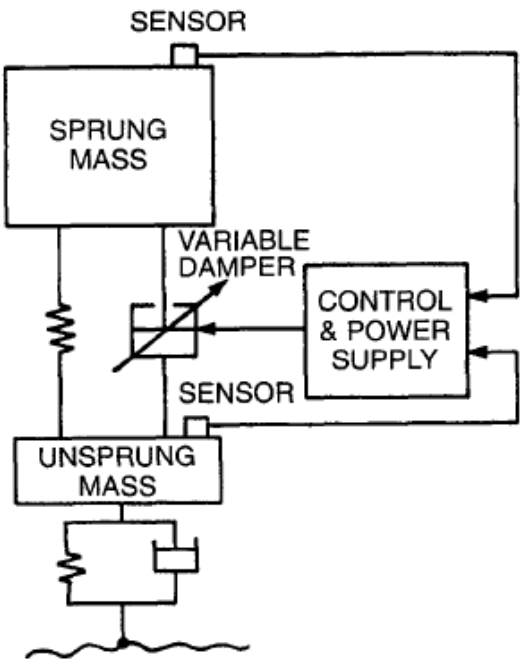

Fig.2 Semi-active suspension [13]

The regulating of the damping force can be achieved by adjusting the orifice area in the shock absorber, thus changing the resistance to fluid motion damping coefficient can change. Recently, the electrorheological and magnetorheological fluids to be developed to control the damper which is popular now a day [13]. The figure3 show that we can change the height by introducing the agnetorheological fluid in portion A.

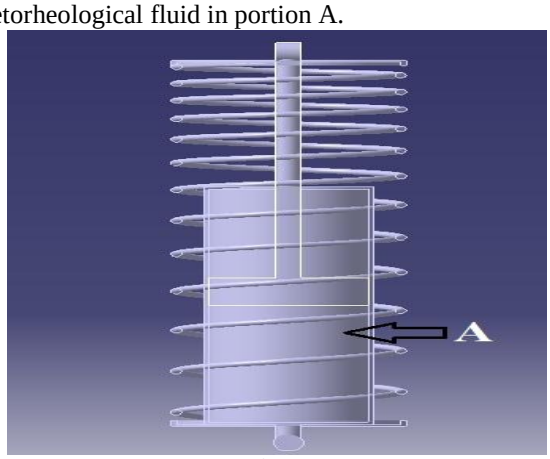

Fig.3. 3-D diagram of suspension with damper

IV. MSC ADAMS

Numerous studies have been conducted on the description and improvement of ride dynamic stability and holding capacity. With the study of active and semi-active suspensions, these criteria for acceptability have been applied in control systems to determine suspension settings. Most of the applications have been for highway travelling in luxury cars equipped with adjustable dampers. In recent research, the focus has turned to dynamic stability of road vehicles. This paper deals with the dynamic stability and road holding capacity of the vehicle. A full-3D model of a sedan car developed in the dynamic simulation package MSC.ADAMS and verified against tracks tests, is used in the investigation. The aim of the investigation is to determine the spring and damper settings that will ensure optimal stability and road holding of the vehicle. There are two end level of ride height which is gradually changes at different speed. The question arises: to what extent do the optimal height settings vary for a given speed if traversed at different speeds and what levels of ride comfort can be achieved in these cases? From this investigation it is endeavoured to determine a speed and height that can be used for further dynamic stability optimization in a model with more variables describing the suspension characteristics and also incorporating handling. To check the optimum height the front and rear suspension characteristics are scaled with respect to the standard suspension by means of front damper and spring scaling factors and rear damper and spring scaling factors.

There are four variables that can be adjusted: the rear and front spring scaling factors and the rear and front damper scaling factors. Also for optimization the height of Centre of Gravity and speed have to adjust at different level. In designing the hardware for a semi-active suspension, it is necessary to determine the optimal suspension settings that will best suitable for ride comfort for roads varying from level and straight travelled at high speeds and curvatures travelled at high speeds. Stochastic multi-objective optimization is applied with the standard deviation of the

vertical body acceleration to evaluate ride comfort, the standard deviation of the relative displacement between the wheel and vehicle body to evaluate working space and the standard deviation of the tire radial force to evaluate road holding.

V. ISO 3888 TEST

ISO 3888 specification for a double lane-change maneuver is widely used worldwide to evaluate the handling and safety of vehicles and their key components. The specification defines the position of a series of cones through which the vehicle must be safely driven.

The results are obtained from the MSC ADAMS car software by putting the initial velocity at different speed and height centre of gravity of the vehicle. The graphs are obtained of chassis acceleration, chassis displacement and chassis velocity of component of longitudinal, lateral, vertical, roll, pitch and yaw. The respective graphs show the results of vehicle at 70km/hr and the ground clearance at 450 mm from the ground.

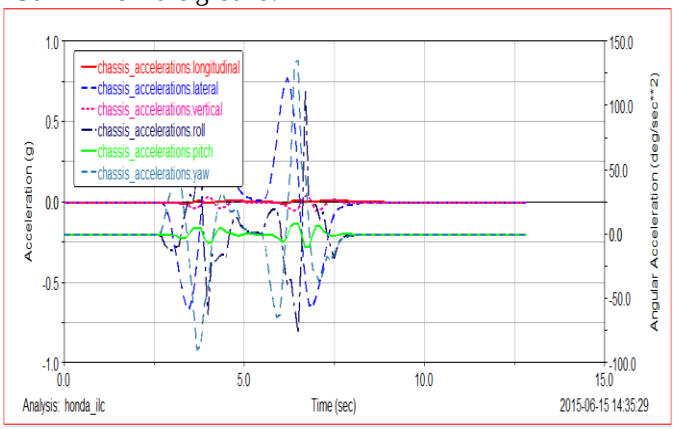

Fig.4 Chassis acceleration Vs Time

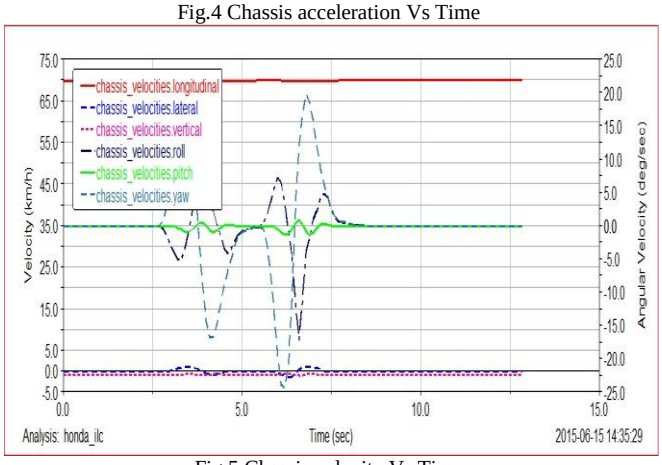

Fig.5 Chassis velocity Vs Time

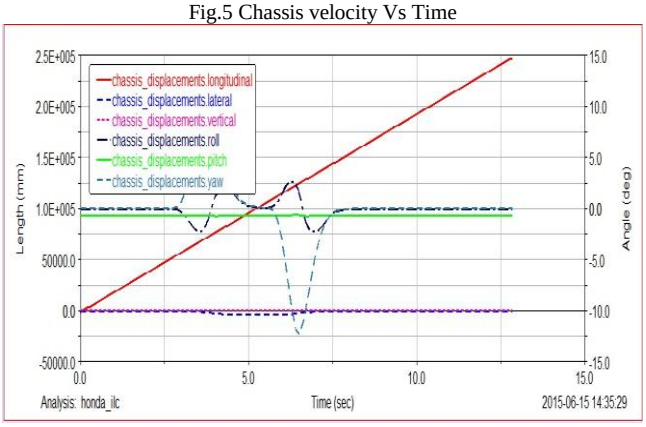

Fig.6 Chassis displacement Vs Time

VI. CONCLUSION

In automobile industry there are always research is going on to provide maximum comforts to the passenger. While considering this situation it provided low stiffness spring or damper, which compromises the handling of the vehicle. For the highway application we need more speed and stability to the vehicle. It is not possible to achieve with constant spring stiffness or damper. The above study show that there are different techniques developed to overcome this problem, but still that system is not implemented in all vehicles, because of their complexity, reliability and cost issue. Therefore it is need to develop the system which is intermediate in passive and active suspension which will provide good stability and holding capacity for the passenger car.

ACKNOWLEDGMENT

I would first like to express my deepest gratitude to Prof. V R. Patil for his guidance and support as my advisor. He is an exemplary Professor and scholar, his enthusiasm for research and teaching is truly inspirational. As I strive for an academic position in my future career, I hope to be able to instill in others the level of passion for learning and exploring that he has instilled in me.

I would also like to sincerely thank the other members of my thesis advisory committee, Prof. A. V. Waghmare, Prof. C. S. Dharankar and Prof. D.Y. Dhande who have also provided significant support and advising during my graduate studies. In addition, I would also like to thank all of the members of the Mechanical Department.

REFRENCES

[1] Seyed Ali Zahiripour, Ali Akbar Jalali "Designing an Adaptive Sliding-Mode Controller for Car Active Suspension System Using an Optimal Proportional-Integral Sliding Surface" International Conference on Future Information Technology and Management Science & Engineering Lecture Notes in Information Technology, Vol.14, 2012

[2] Ayman A. Aly, and Farhan A. Salem "Vehicle Suspension Systems Control: A Review" International Journal of Control, Automation and Systems Vol.2 No.2, July 2013

[3] C. Lauwerys, J. Swevers, P. Sas "Model free control design for a semi-active suspension of a passenger car" Proceedings of ISMA2004

[4] Hrishikesh V Deo, Nam P Suh "Axiomatic Design Of Customizable Automotive Suspension" The Third International Conference on Axiomatic Design Seoul, June 21-24, 2004

[5] P.E. Uys, P.S. Els, M. Thoresson, "Suspension Settings for Optimal Ride Comfort Of Off-Road Vehicles Travelling On Roads with Different Roughness and Speeds" Journal of Terramechanics 44 163–175, 2007

[6] Debojyoti Mitra "Design Optimization of Ground Clearance of Domestic Cars" International Journal of Engineering Science and Technology Vol. 2 (7), 2678-2680, 2010

[7] Morteza Montazeri-Gh, Mahdi Soleymani Morteza Montazeri-Gh & Mahdi Soleymani "Active Suspension System in Parallel Hybrid Electric Vehicles" IUST International Journal of Engineering Science, Vol. 19, No.5-1, Page 97-104, 2008

[8] Guangqiang Wu, Guodong Fan, Jianbo Guo "Ride Comfort Evaluation for Road Vehicle Based on Rigid-Flexible Coupling Multibody Dynamics" Theoretical & Applied Mechanics Letters 3, 013004, 2013
[9] Mohammad H. AbuShaban1, Mahir B. Sabra, Iyad A. Abuhadrous "A New Control Strategy for Active Suspensions Using Modified Fuzzy and PID Controllers" The 4th International Engineering Conference- Towards Engineering of 21st Century, 2012
[10] C. Collette, A. Preumont "Energy Transfer in Semi-Active Suspension"
[11] Jyh-Chyang Renn and Tsung-Han Wu "Modeling and Control of A New 1/4t Servo-Hydraulic Vehicle Active Suspension System", Journal of Marine Science and Technology, Vol. 15, No. 3, pp. 265-272, 2007
[12] Thomas D. Gellispie "Fundamental of Vehicle Dynamics", Society of Automotive Engineers, Inc.400 Commonwealth Drive Warrendale, PA 15096-000, pp 269-271
[13] J. Y. Wong "Theory of Ground Vehicles", John Wiley & Sons, Inc New York, pp 474-481

